Part number	Poles	Dim L.	Dim a.
14020225402XXX	2	20,32	10,16
14020325402XXX	3	30,48	20,24
14020425402XXX	4	40,64	30,48

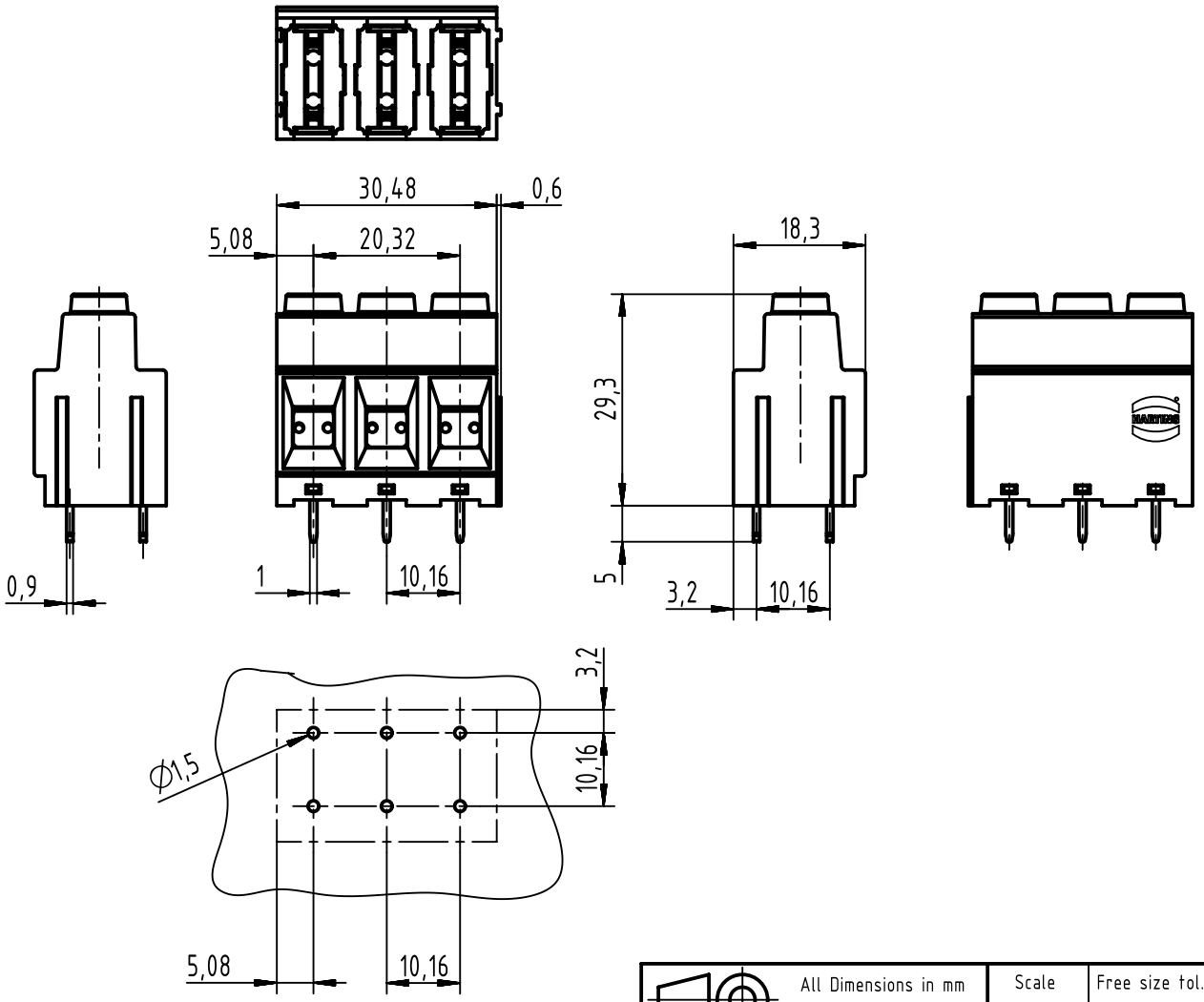

further information see DS 14027301801

All Dimensions in mm
Original Size DIN A4

Scale 2:1

Free size tol.

Ref.

Sub.

All rights reserved

Department EL PD

Created by ZHUANGJ

Inspected by LUOK

Standardisation HOFFMANN

Date 2020-03-25

State Final Release

Title har-flexicon 10.16 TTSH-XX BK

Doc-Key / ECM-Nr. 100610735/UGD/000/C 500000169386

HARTING Electronics GmbH
D-32339 Espelkamp

Type TB

Number 1402XX25402XXX

Rev. C

Page 1/1

A4